LINEAR SPECIFICATONS:

ENCODER INDEX: 2 ± 1mm FROM REAR STOP
OPERATING TEMPERATURE: 0°C TO 50˚C
ALL DIMENSIONS ARE IN mm

REVISION HISTORY				
REV	DATE	ECN	DESCRIPTION	APPROVED
H	5/29/2015		PART NUM	TOAN VU

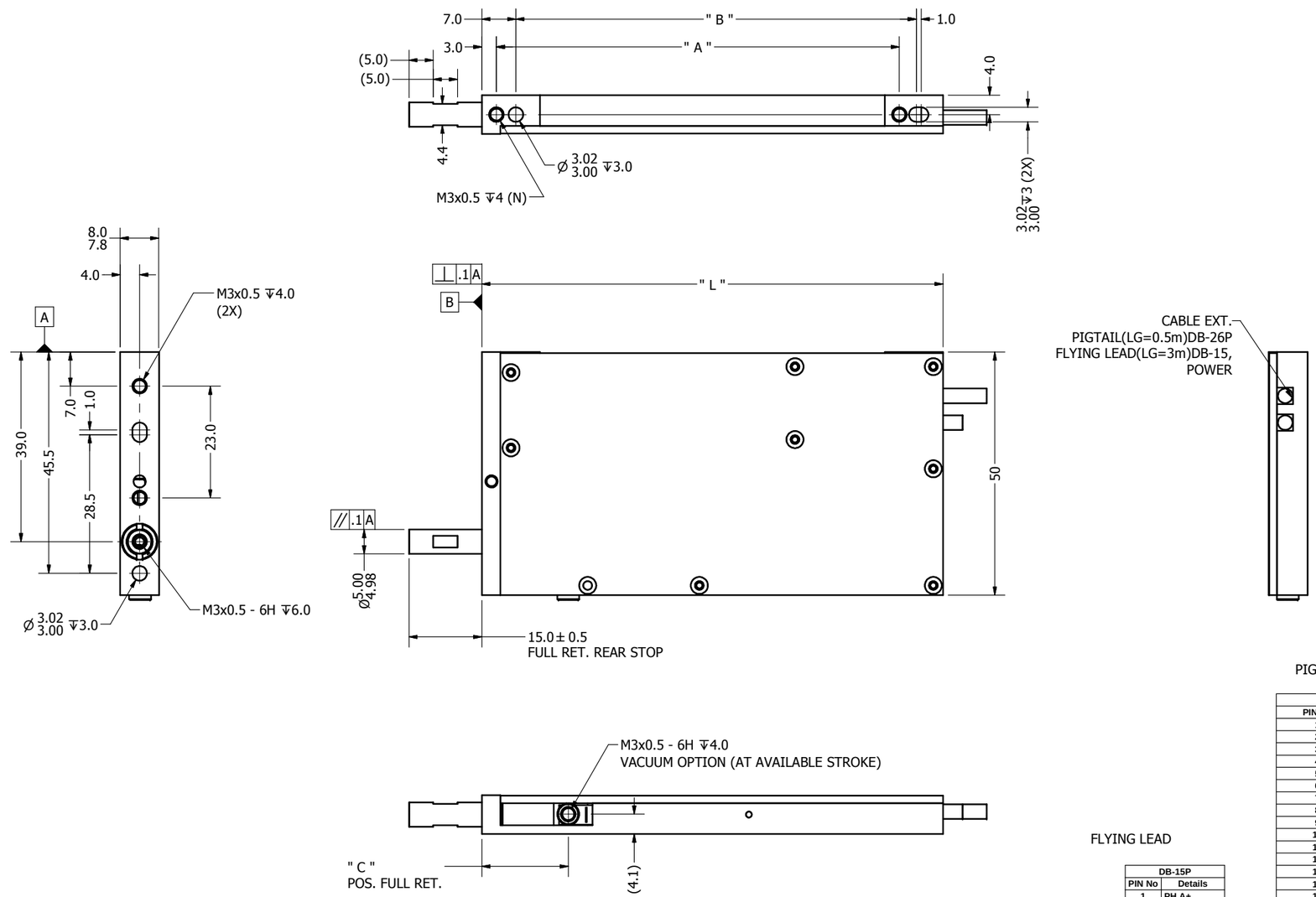

PIGTAIL

DB-26P	
PIN No	Details
1	PH. A+
2	PH. B+
3	PH. Z+
4	NC
5	NC
6	NC
7	NC
8	NC
9	NC
10	PH. A-
11	PH. B-
12	PH. Z-
13	NC
14	NC
15	NC
16	NC
17	NC
18	NC
19	+5V DC
20	5V RTN
21	NC
22	COIL U (COIL+)
23	COIL V (COIL-)
24	COIL W
25	NC
26	NC

FLYING LEAD

DB-15P	
PIN No	Details
1	PH A+
2	PH Z+
3	PH B+
4	+5V
5	NC
6	NC
7	NC
8	NC
9	PH A-
10	PH Z-
11	PH B-
12	5V RTN

POWER

POWER	
PIN No	Details
1	GND
2	+V
3	U (COIL+)
4	V (COIL-)
5	W
6	NC

NOTE: SPECIAL MODIFICATION REQUIRED WITH 48Vdc VERSION.

Table					
No	Details	UNIT	LCA8-010-5X-2	LCA8-025-1X-3	LCA8-050-3X-3
1	LINEAR STROKE	mm	10	25	50
2	PEAK FORCE	N	4	2.6	2.6
3	FORCE CONSTANT	N/A	3.2	2.2	2.2
4	ENCODER RESOLUTION	micron	5,1	5,1	5,1
5	ENCODER REPEATABILITY	count	+/- 3	+/- 3	+/-3
6	MAXIMUM CURRENT	Amp	1.7	1.3	1.3
7	COIL RESISTANCE	Ohm	14.5	17.9	17.9
8	MOVING MASS	Kg	0.025	.027	0.03
9	TOTAL MASS	Kg	0.16	0.18	0.22
10	VACUUM OPTION		YES	YES	MOD. REQUIRED
11	SPRING OPTION		YES	YES	MOD. REQUIRED
12	DIMENSION (L)	mm	95	110	135
13	DIMENSION (A)	mm	83	98	123
14	DIMENSION (B)	mm	82.5	97.5	122.5
15	DIMENSION (C)	mm	18	33	N/A
16	(N) Number of mounting hole		2	2	2

TOLERANCES ARE:
X. ± 0.50
X.X ± 0.1
X.XX ± 0.05
X.XXX ±
ANGULARITY ± 0.1°
CONCENTRIC ± 0.01
ROUNDNESS ± 0.05
EDGE BREAK 0.02 MAX
CHAMFER 0.03 MAX

FILE NAME: LCA8-XXX-YY-Z_H.idw

MATERIAL:
HEAT TREATMENT:
MACHINE FINISH: 3.2 EXCEPT NOTED
PROTECTIVE FINISH: NONE NONE SEE NOTE
SPEC. NUMBER: NONE

SMAC

REF. NUMBER: LCA8-2X,3X

DESIGNED BY:	DATE:	CHECKED BY:	DATE:	CONTRACT:
ToanVu	2/18/2013			LCA8-XXX
DRAWN BY: ToanVu	DATE: 5/29/2015	APPROVED BY:	DATE:	

PART NAME: LCA8-XXX-YY-Z

SHEET NUMBER: 1 OF 1

SCALE: NONE (DO NOT SCALE DWG) | DWG SIZE: C | PART NUMBER: LCA8-XXX-YY | REVISION: H